Installing or Rebuilding Your Electric Service

POLK BURNETT
ELECTRIC COOPERATIVE
A Touchstone Energy® Cooperative

Contents

Policies for New and Rebuilt Electric Service **2 - 4**
Paperwork and fees....2
Five-year policy....3
Proposed route location and conditions....3
Construction service....3
Security lights....3
Marking private underground facilities....4
Idle services....4

Specifications and Diagrams **4 - 11**
Conductor types and sizes....4
Single-family dwellings....4
Bypass meter socket or base....4
Grounding specifications....4
Overhead service....5-7
Underground service....8-10
Mobile home service....9
Meter socket diagram for underground service....10
Three-phase commercial/industrial service....11
Single-phase commercial/industrial service....11

Please note: Service requirements and fees are subject to change at any time.

Policies for New and Rebuilt Electric Service

Polk-Burnett is pleased to be your electric service provider, and you have our pledge to provide the best service possible!

The information you need for us to begin construction of your new or rebuilt service is detailed following. Polk-Burnett is here to assist you. Should you have any questions or concerns, don't hesitate to call our operations department at 800-421-0283 or stop by.

Paperwork and Fees

1) **The application for a new service.** Please complete and sign the Application for Electric Service and Co-op Membership enclosed.
2) **The data sheet.** Depending upon your project, please complete either the New Service Data sheet or Service Rebuild Data sheet as completely as possible. On the New Service Data sheet please indicate the meter socket location on the reverse side of the form.
3) **The right-of-way easement.** This form must be completed in ***black ink***, contain ***no modifications***, and include the ***complete legal description*** of your property (from the deed or abstract), and the ***notarized signature(s)*** of the appropriate landowner(s). *Please note: Polk-Burnett will make the initial contact to help you secure easements from adjacent property owners, but it is the ultimate responsibility of the party requesting electric service to obtain any and all easements.*
4) **Right-of-way clearing.** Initial right-of-way clearing (performed to Polk-Burnett specifications) is your responsibility. Downed trees and brush must be cleared for accessibility to the service route. For underground installations, tree stumps greater than six inches in diameter cannot block the direct line extension route, and the route must be at final grade.
5) **Wiring Affidavit.** State law requires that prior to connection, Polk-Burnett obtains a wiring affidavit completed by a Wisconsin licensed electrician, based on your municipality's requirement if you do not need an ***Electrical Inspection Certificate***.
6) **UDC Electrical Inspection Certificate.** State law requires that prior to connection of new one- and two-family dwellings, Polk-Burnett obtains a UDC electrical inspection certificate completed by a Wisconsin licensed electrician and the building inspector, based on your municipality's requirement. If a UDC electrical inspection is required, please complete the top portion of the ***Electrical Inspection Certificate*** and have your building inspector complete and sign the bottom left portion.
7) **Service Inspections.** Polk-Burnett Electric Cooperative requires wiring installations shall be subject to inspections. If your new service or service rebuild is not subject to a UDC inspection, it will need to be inspected by a Wisconsin certified commercial electrical inspector before connection. Please have a Wisconsin licensed electrician complete the top portion of the ***Electrical Inspection Certificate*** and a Wisconsin certified commercial electrical inspector complete and sign the bottom left portion.
8) **Permits.** State law requires a permit to be filed with the State of Wisconsin before any installation of new or an addition to any electrical service,

feeder or branch circuit serving any of the following:

1. Farm
2. Public building, structure or premises
3. Place of employment
4. Campground
5. Manufactured home community
6. Public marina, pier, dock or wharf
7. Recreational vehicle park
8. Except as specifically exempted by rule or statue, vacant land for which a permit under this chapter or ch. SPS 320 has not already been issued.
9. Except as specifically exempted by rule or statue, any structure for which a permit under this chapter or ch. SPS 320 has not already been issued.

   The state electrical inspector may inspect the work performed and a state electrical inspection certificate will need to be filled out before connection. Permits can be applied for online, **https://esla.wi.gov.**

   Sate law requires inspections on all wiring installations for the nine commercial requirements even if a permit is not required.

9) Construction fees
All non-commercial single-phase services. (All others see p. 11.):

- See rate sheet for current pricing on new services.

  For an estimate to rebuild your service, contact Polk-Burnett to set up an appointment with a field representative to visit the site. Charges are dependent on the existing electric service and site requirements.
- Services that have a motor larger than 10 h.p. may have additional requirements and/or charges apply. Please contact Polk-Burnett operations department.
- For underground secondary service, the wire can be installed in conduit for an additional fee to avoid conflict with future landscaping.
- On new services, Polk-Burnett will provide the trenching of the wire. On a service rebuild, Polk-Burnett can provide the trenching of secondary wire for an additional fee.
- Signs, traffic lighting, and storage rental units are considered commercial services. Additional charges may apply. Please contact the operations department for details.

10) Scheduling installation. Scheduling is done on a first-come, first-served basis. To be placed on the construction schedule, all of the following requirements must be met:

- All paperwork must be completed and original copies received in our office.
- The necessary fees must be paid.
- The foundation must be backfilled and the site to final grade.
- The bypass meter socket must be installed per specifications and ready to connect.
- Emergency requests for electric service installations will require a three business-day minimum wait for locating underground utilities through Digger's Hotline.
- For underground service performed during winter conditions, additional fees and requirements will be incurred. See the new service rate sheet for details.

Five-year Policy:

Refund Due:
Future eligibility for a partial refund of the member's initial cost for the line extension will apply provided all of the following conditions are true:

1. Additional permanent services are served from the original primary line extension within a five-year period of time from the date of the initial connection.
2. The existing location is under original ownership.
3. The location is still an active electric account.
4. A refund is contingent on cooperation on future power line extension(s) to others.

Proposed Route Location and Conditions:

- Routing as determined by Polk-Burnett, shall readily permit future access and safe, efficient operation, maintenance, and replacement of the installed facilities. It shall also be routed in such a way to cause the least possible interference from any construction activity by the current or future property owner. The route will follow designated roads and suitable easement roads and in some cases, lot lines and driveways as approved by Polk-Burnett.
- Polk-Burnett will coordinate with you to establish the electric service route. Any deviations from the proposed route may cause extra charges to the member requesting the service. The proposed route will be identified by white flags and/or paint. Flags must not be moved without Polk-Burnett authorization.
- Charges will apply if any stump or demolition burial areas are encountered during construction of the new electric service on your property.
- Site restoration – work performed typically requires large equipment and/or some form of excavating. Polk-Burnett will take efforts to restore the work site to as reasonable of a condition as possible to minimize disturbance to the area due to our construction activities. There may be situations due to soil conditions, landscaping, or other obstacles encountered in the course of performing the work whereby Polk-Burnett cannot restore the site to a condition preferred by the property owner. Future erosion, settling, and/or landscaping issues can occur and are beyond the control of Polk-Burnett.

Construction Service:

This type of service enables the member to use electric power supplied by Polk-Burnett during construction of a structure which will become a permanent electric load. The meter must be at a Polk-Burnett power source as determined by Polk-Burnett. There is a 12-month limit to make your service permanent. Two options are available for this service:

- A member-installed construction service. Please see the New Service Rate Sheet for fees.
- A Polk-Burnett installed construction service where we will install a pedestal that can be used in most cases. Please see the New Service Rate Sheet for fees.

Security Lights:

- A signed security light agreement is required.
- LED lights are available in two lumen sizes.
- Security light extensions must be from a Polk-Burnett source of power as determined by Polk-Burnett. The

maximum distance from the source of power to the pole is 150 feet.

- Extensions from a meter socket cannot be allowed.
- For underground service, Polk-Burnett provides the trench from the source of power to the pole location
- After initial installation there is an additional charge for requests to change the security light location and/or direction.
- Additional fees will be incurred for underground service performed during winter conditions. See new service rate sheet for details.

Marking Private Underground Facilities

Prior to installation of underground electrical service, Polk-Burnett will mark the proposed service route with white flags and/or paint. Polk-Burnett will call Digger's Hotline for the marking of existing underground public utilities, including electric, telephone, and cable TV.

It is the member's responsibility to physically mark the location of any and all other obstacles that lie underground within 10 feet on either side of the proposed trenching route.

Such obstacles include, but are not limited to, septic and sewer systems, buried wires for out-buildings or decorative lighting, and LP gas lines. Members must mark the location of all obstacles with stakes or flags or by painting the ground. ***The member accepts responsibility*** for damage to any such underground obstacle that the member fails to mark or mark accurately. In addition, it is suggested that any underground obstruction in the flagged path be exposed by you or your contractor prior to our installation.

Idle Services

Any newly installed service must be energized within 90 days upon completion of work by Polk-Burnett. In the event a new service is not energized, it will be considered an "idle service," and a non-refundable monthly fee will be charged to retain the facilities for future use. A service energized and later disconnected also will be charged a monthly fee.

Specifications and Diagrams

The information in this section addresses questions most commonly asked by our members when applying for electric service. While this information covers Polk-Burnett's requirements for the electrical service entrance, it is ***not*** meant to replace state or national codes. For a copy of either code book, please contact:

National Electric Code
National Fire Protection Association
1 Batterymarch Park • P.O. Box 9101
Quincy, MA 02269-9904
(800) 344-3555

Wisconsin State Electric Code
Department of Industry, Labor and Human Relations
201 E Washington Avenue • Madison, WI 53702
(608) 266-3064

NOTE: Contact an electrical contractor to perform your electrical work.

Conductor Types and Sizes

See NEC 310-16 and Note 3 (Single Phase Dwelling Services)

Service Size	Minimum Sizes	
	Copper	Aluminum
100 amp	No. 4	No. 2
150 amp	No. 1	No. 2/0
200 amp	No. 2/0	No. 4/0

Single-Family Dwellings

Single family dwellings may have only one main service disconnect. *Exception: A second main may be installed for (1) a different rate (Off-Peak heat) or a different voltage; or (2) for services over 300 amps. Wis. IHLR Code #16.25 (6a).*

Bypass Meter Socket or Base

- A lever bypass meter socket or base to be furnished and installed by electrician and located so as it is accessible to cooperative personnel.
- Meter socket must be located not less than four (4) feet nor more than six (6) feet above ground.
- For underground installations, the meter socket type must specifically be for underground applications, and the size must be 200 amp minimum regardless of the size of the load.
- For off-peak service metering, please contact Polk-Burnett.
- For safety purposes, no overhead service entrance will be allowed to be installed on cooperative's primary (main line) poles.

Grounding Specifications

Ground Rods ***NEC 250-83(c)***

- Two grounds are required; the first being two (2) feet from the service entrance and the second being a minimum of eight (8) feet away from the first.
- Ground rods must be copper clad steel, and at least one-half (1/2) inch in diameter by eight (8) feet in length.

Ground wire

- Ground wire must be #6 copper minimum or equivalent *(see NEC 250-94 for proper size).*
- Grounding conductors shall be continuous. *NEC 259-91(a).*
- Ground wire shall be attached to the service entrance neutral at the main panel.
- Main panel must be bonded to the neutral with bonding screw. *NEC 250-53(b).*
- Neutral and ground bus bar shall be bonded only at central service location.

Specifications for Overhead Service: Meter on Pole

(only as approved by Polk-Burnett • diagram below)

1) Overhead service with meter on pole must be grounded according to GROUNDING SPECIFICATIONS as detailed herein.
2) Pole should be in close proximity to load being served.
3) Member's weatherhead for service entrance cables shall be located above the point of attachment of the service drop conductors to the building or other structure. *Exception: Where it is impractical to locate the service head above the point of attachment, the service head location shall be permitted not farther than 24 inches from the point of attachment. NEC 230-54(c).*
4) Leave 18 inches minimum drip loop for overhead service. *NEC 230-54(f).*
5) Disconnecting means with overcurrent protection shall be provided to disconnect the utility wiring from the premises wiring at any point where utility wiring terminates and premises wiring continues overhead or underground. *Polk-Burnett policy.*
   a) The service overcurrent device shall be an integral part of the service disconnecting means or shall be located immediately adjacent thereto. *NEC 230-91.*
   b) Overcurrent protection shall be provided in conjunction with all grade level switches, either as an integral part or located immediately adjacent thereto.
6) A separate conduit must be utilized for all load-side conductors and shall be a four-wire system. *NEC 230-7.*

Service on Secondary Pole

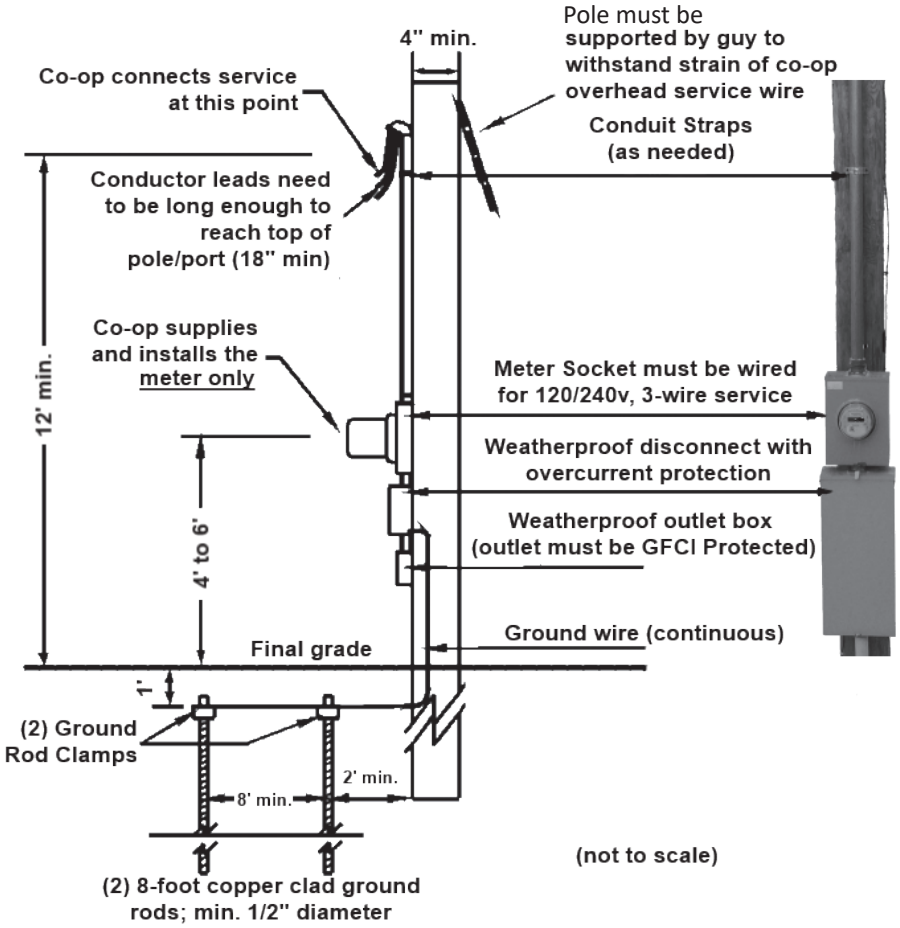

Specifications for Overhead Service:

1) Overhead service with meter on building must be grounded according to GROUNDING SPECIFICATIONS as detailed herein.
2) Minimum service contact point to be 12 feet above ground for overhead service attachment. *NEC 230-26(b).*
3) If a "through the roof" riser (service mast) is needed to obtain the required attachment height, it shall be supported to withstand strain of service drop conductors (2-inch minimum rigid metal conduit).
   a) If service mast extends more than 36 inches above the roof line, it must be guyed.

Service Mast Installation

Note: A special kit is available commercially that provides support and weatherproofing at the roofline.

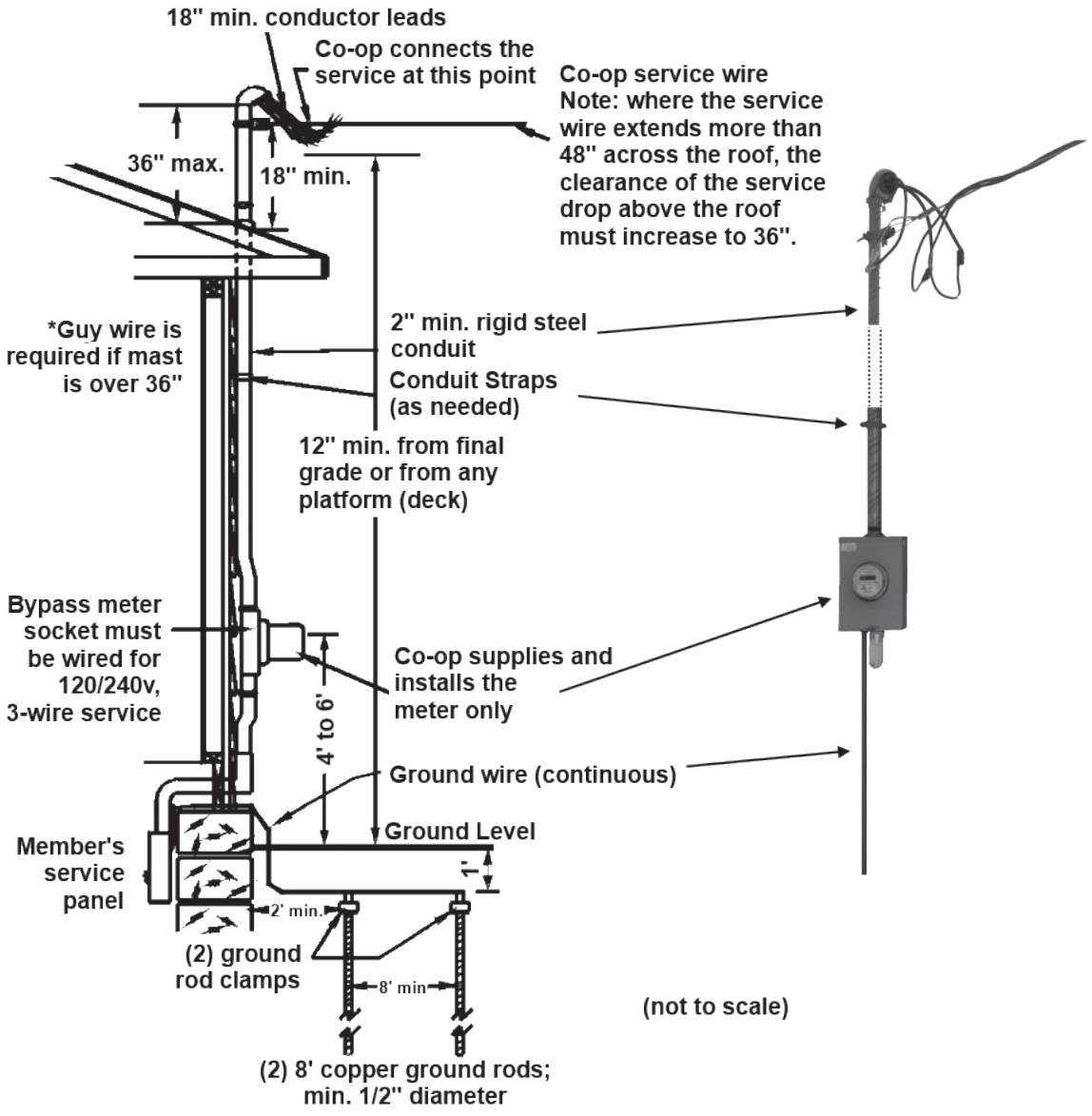

Meter on Building

4) Member's weatherhead for service entrance cables shall be located above the point of attachment of the service drop conductors to the building or other structure. *Exception: Where it is impractical to locate the service head above the point of attachment, the service head location shall be permitted not farther than 24 inches from the point of attachment. NEC 230-54(c).*

5) Leave a minimum 18 inches drip loop for service wires. *NEC 230-54(f).*

Surface-Mounted Socket Installation

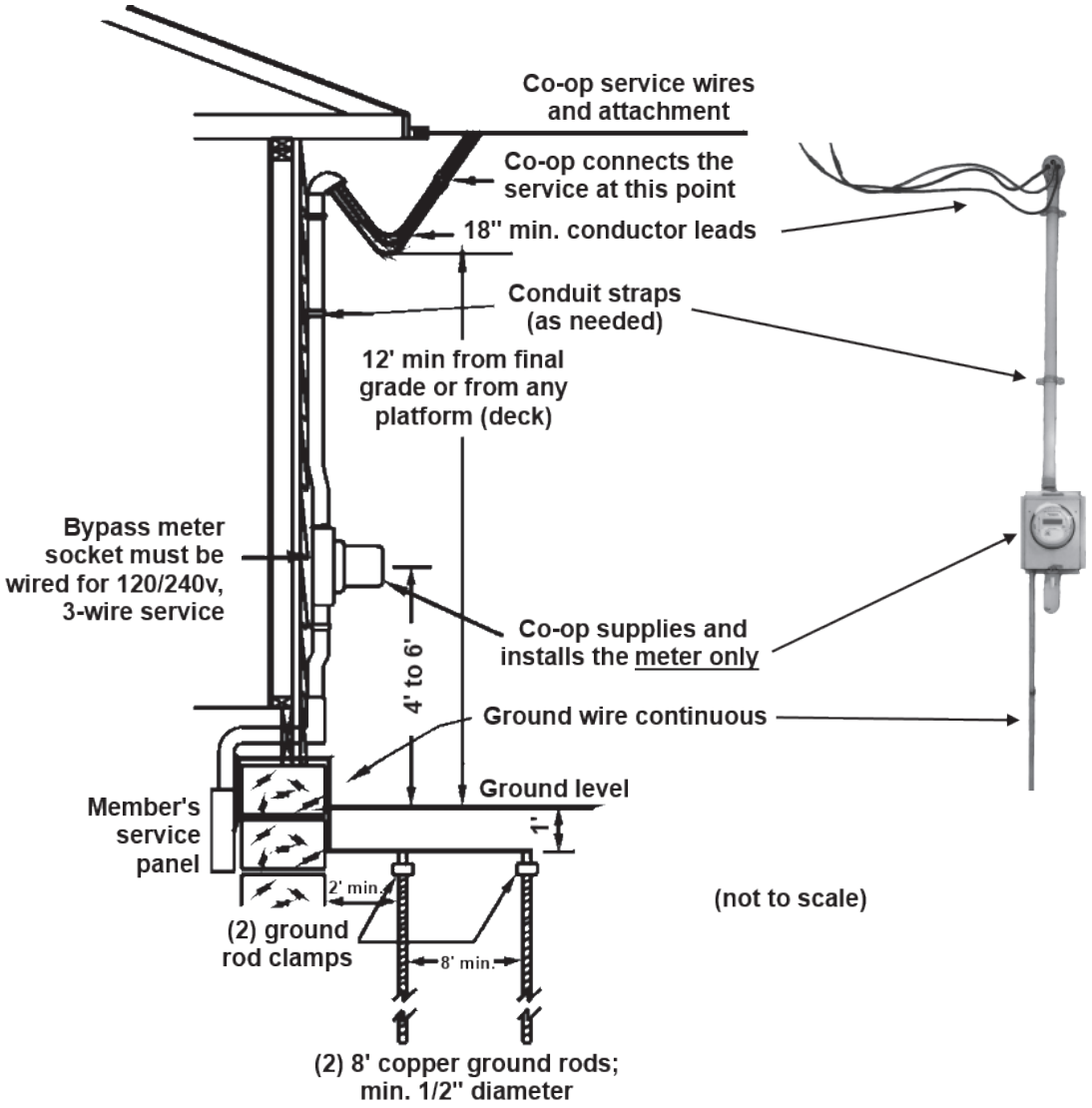

Specifications for Underground Service

1) Due to difficult terrain or soil conditions, there may be instances when we cannot install an underground service.
2) Underground service must be grounded according to GROUNDING SPECIFICATIONS as detailed herein.
3) Two-inch diameter protective conduit with bushings on each end must be provided by the member from the bottom of the meter socket to a depth of one (1) foot below grade for service conductor. Approved PVC Schedule 80 or rigid metal conduit may be used. Thin wall conduit (EMT) is unacceptable. *NEC 331-4(5).*
4) All ungrounded cables and conductors extending from the central service location shall have overcurrent protection located at the central service and sized in accordance with the ampacity of the ungrounded conductor. *NEC 230-90(a).*
5) Disconnecting means with overcurrent protection shall be provided to disconnect the utility wiring from the premises wiring at any point where utility wiring terminates and premises wiring continues overhead or underground. *Polk-Burnett policy.*

a) The service overcurrent device shall be an integral part of the service disconnecting means or shall be located immediately adjacent thereto. *NEC 230-91.*

b) Overcurrent protection shall be provided in conjunction with all grade level switches, either as an integral part or located immediately adjacent thereto.

Underground Service - Permanent on Structure

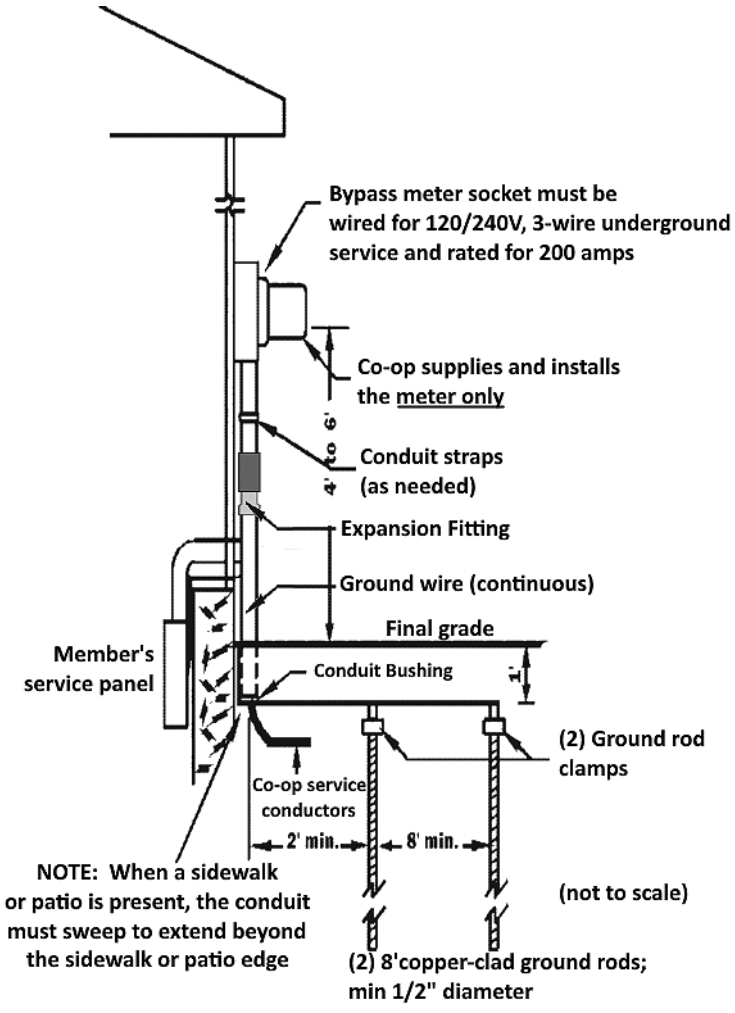

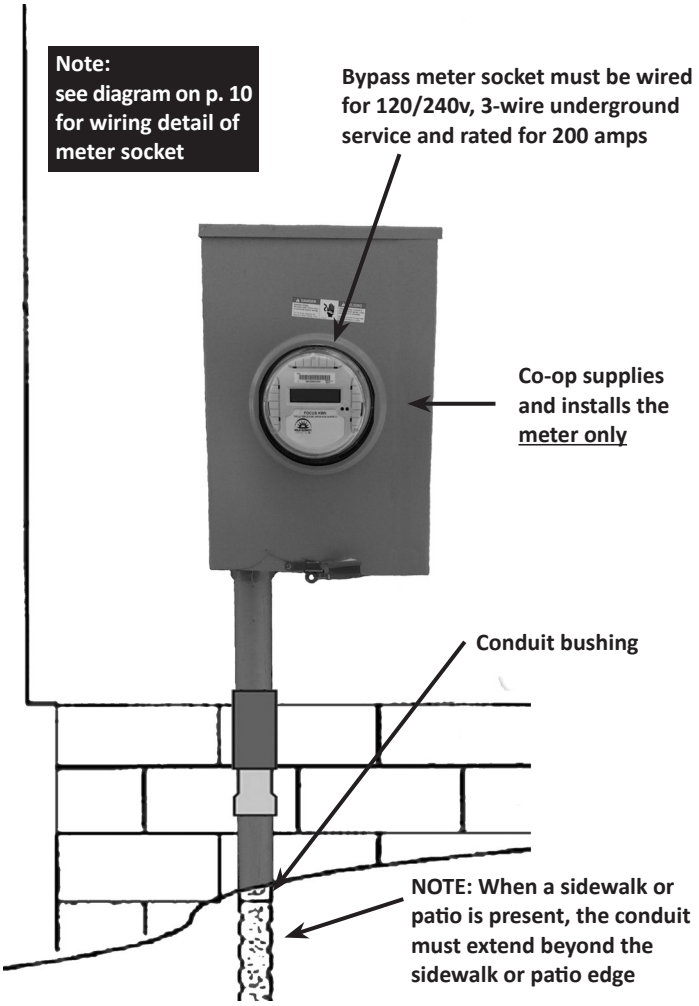

Refer to "Specifications for Underground Service" page 8 for general instructions on installing service according to the diagram below.

Underground Service - Permanent on Pedestal Mobile/Manufactured Home Service

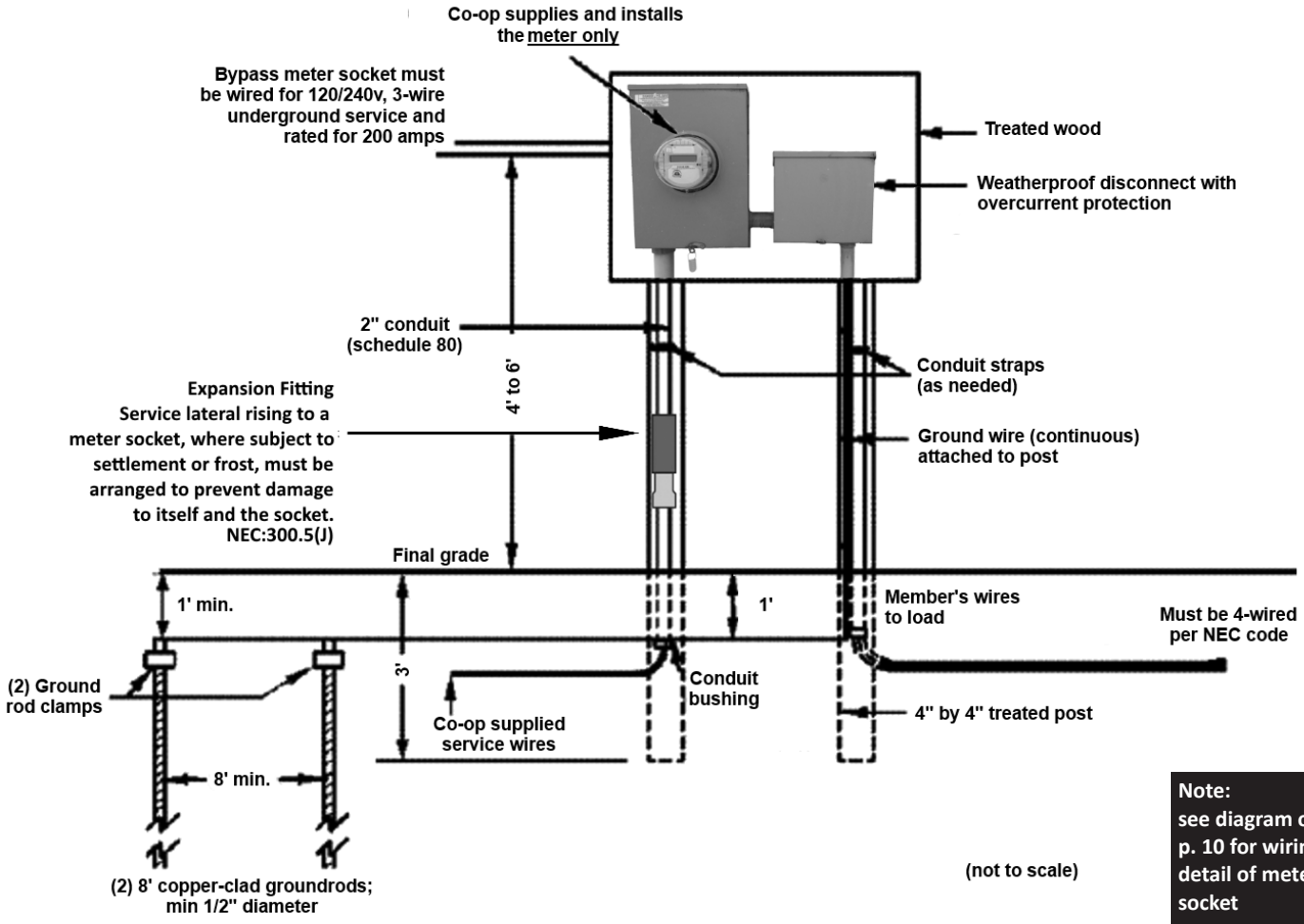

Note:
see diagram on p. 10 for wiring detail of meter socket

Specifications for Mobile/Manufactured Homes

1) Service to mobile homes shall comply with the NEC and the Wis. Adm. Code as they apply.
2) Service equipment (meter and disconnect) shall be located adjacent to the mobile home but not in or on it. Service equipment shall be located in sight from and not more than 30 feet* from the mobile home it serves. *NEC 550-23.*
3) If your mobile/manufactured home will not be on a permanent foundation, the meter socket must not be mounted directly on a wall of the home.
4) If you are planning to place your mobile/ manufactured home on a permanent foundation, you may then mount the meter socket on the foundation of the home providing you comply with NEC and the WI Adminstrative Code concerning the service wiring. Important: consult with an electrician for proper wiring to avoid injury.

Meter Socket Installation for Underground Service

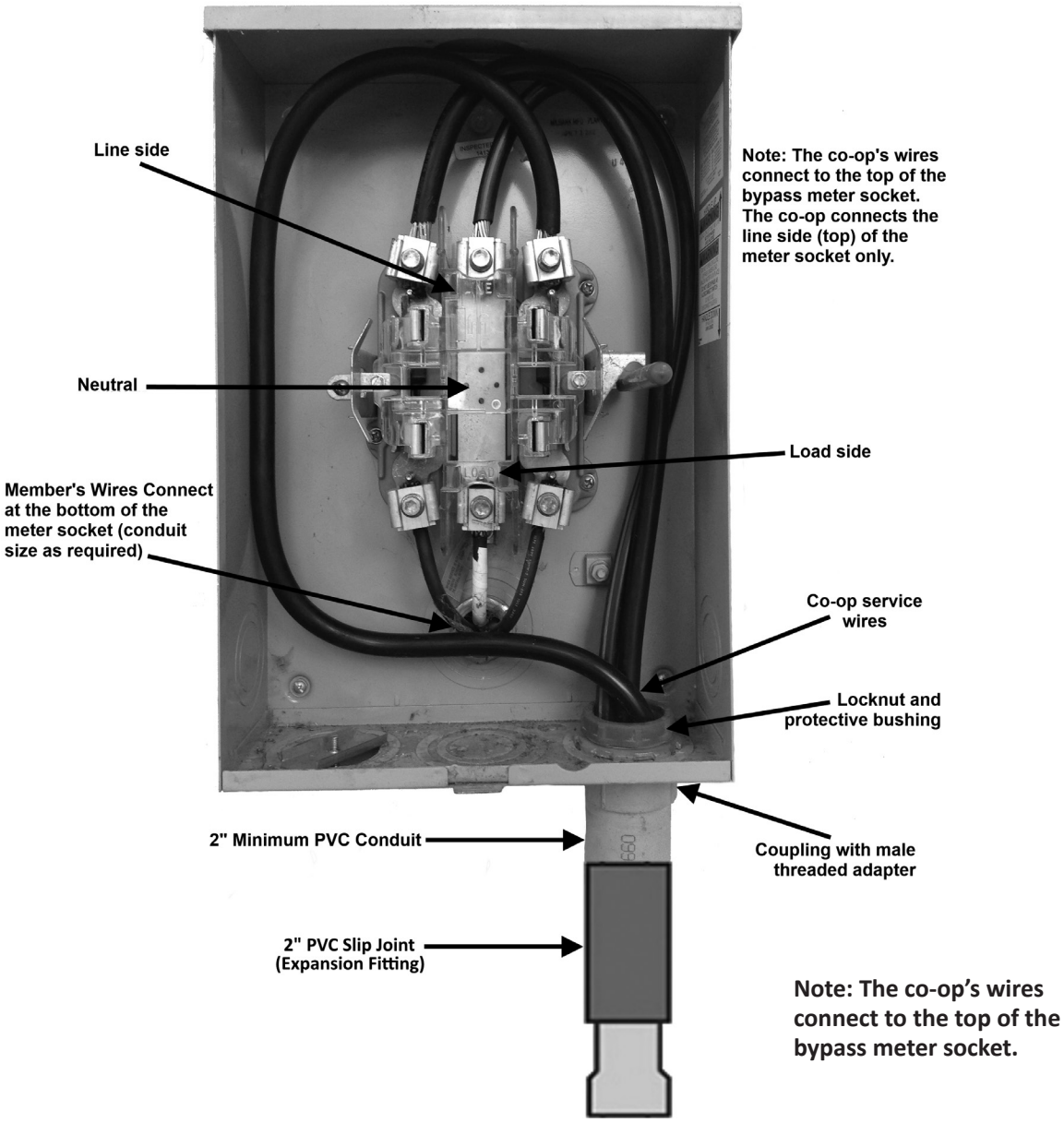

Specifications for Three-Phase Commercial/Industrial Service

The following is a statement of responsibilities for various aspects of the extension of three-phase electric service for commercial/industrial accounts. Please contact the operations department at 800-421-0283 if you have any questions regarding this information.

Primary service

Overhead: Polk-Burnett will provide all overhead facilities and transformers. Three-phase service voltage of 480/277v or 208/120v is available.

Underground: Polk-Burnett will provide conduits, trenching and backfilling, conductors, transformer pad, and padmount transformer. Three-phase service voltage of 480/277v or 208/120v is available. Cable route must be at final grade.

Secondary service

Overhead: Polk-Burnett provides conductors and makes terminations at the transformer and meter loop.

Underground: Division of responsibility between the member and Polk-Burnett for installation of three-phase underground service depends on the meter socket and service panel location. Situations are addressed on a case-by-case basis. Please contact the operations department for further details.

Metering

Overhead: Polk-Burnett will provide a demand meter and CTs. The member is responsible for installation of meter socket and conduit from CTs to meter.

Underground: Meter sockets must be purchased from Polk-Burnett and installed by member or electrician on outside of building. For large commercial/industrial services (as determined by the co-op), Polk-Burnett will install the purchased meter socket on the padmount transformer. Polk-Burnett will provide a demand meter.

Specifications for Single-Phase Commercial/Industrial Service

Primary service

Polk-Burnett will provide and install all conduit, trenching, conductors, and transformers.

Secondary service - 200 amp/320 amp

Overhead: Polk-Burnett will provide conductors and make the terminations at the transformer and at the meter loop.

Underground: Polk-Burnett will make terminations at the transformer and line side of the bypass meter socket. Polk-Burnett will provide service conductors and the meter. The member will provide and install all necessary conduit (2” minimum), at a minimum depth of 24” and backfilling.

200 AMP, 2” minimum schedule 80 PVC
320 AMP, 3” minimum

Secondary service – over 200 amp

Polk-Burnett will provide the CTs, CT meter, and conductors. Polk-Burnett is responsible for terminations at the transformer. The member will make connections at the CT cabinet and provide and install all necessary conduit (4” minimum) at a minimum depth of 24”, and backfilling.

800-421-0283
polkburnett.com

POLK BURNETT
ELECTRIC COOPERATIVE
A Touchstone Energy® Cooperative

December 2026